


## HEATIT 7S NFC WHITE RAL 9003

Thermostat 3600W 16A

| | |
|---|---|
| **Art.no** | 5430585 |
| **GTIN** | 7071236016878 |

Heatit 7S NFC is an electronic thermostat for electrical underfloor heating. The thermostat has three modes; Comfort, Eco and weekly program.

The thermostat fits in standard European wall boxes and can be used with most frames that are adapted to System 55. The thermostat has a built-in sensor and may be connected to two external sensors.

Heatit NFC Thermostat has a built-in NFC chip to control the thermostat via NFC app on your phone. All parameters can be configured from the app, and you can also set up weekly schedules via the app.

Designed for electrical heating.

## PRODUCT FEATURES

- NFC thermostat
- 7-segment LED display
- Floor sensor
- Internal room sensor
- External sensor (wired)
- Adaptive regulation
- Weekly schedule
- Single pole switch
- Lock / child safety
- Temperature calibration
- 3 modes: Comfort, Economy and Automatic
- Requires a smartphone with iOS 14, Android 6.0 or later + NFC support

## PRODUCT DATA

| | |
|---|---|
| Ambient temperature range in use | 5 to 40°C |
| Min. and max ambient humidity (RH%) | 10 to 85% |
| Colour | White RAL 9003 |

## THERMOSTAT DATA

| | |
|---|---|
| Regulation temperature | 5 to 40°C |
| Compatible NTC-sensors (kΩ @ 25°C) | 6.8, 10, 12, 15, 22, 33, 47 |
| Temperature sensitivity | ±0,5 |
| Error margin temperature | 0,5 |
| Hysteresis | ±0,5 |
| Ohm value at 25°C | 10kΩ |
| Max length of NTC sensor | 50m |

## ADDITIONAL INFO

| | |
|---|---|
| IP Code | IP21 |
| Certification | Reach, RoHS |
| EN Standards | CE |
| Warranty international | 2 years |
| Customs number | 90321000 |
| Country of origin | ES |

## IOT / SMART HOME SPECIFIC DATA

| | |
|---|---|
| Primary IoT Protocol | Near Field Communication (NFC) |
| Alternate IoT-communication protocols | No alternative communication protocols |
| Push buttons | 3 |

## ELECTRO TECHNICAL DATA

| | |
|---|---|
| Voltage | 230VAC 50Hz |
| Voltage Output | 230VAC 50Hz |
| Own power usage | 0.5W |
| Max load (resistive load) | 3600W |
| Max load (resistive load) | 16A |
| Connection terminals diameter | 0.2 to 2.5mm$^2$ |
| Max tightening torque connections | 2N·m |
| Connection type | Screw clamps |

## PRODUCT DIMENSIONS

| | | | |
|---|---|---|---|
| Product length | 51.1mm | Product width | 84mm |
| Product height-/depth | 84mm | Product net weight | 109g |

## MAINTENANCE

The device is maintenance-free. Indoor use only.

## ADDITIONAL INFORMATION

Approved for use in bathrooms.

Heatit Controls AB declares that this product is in compliance with the essential requirements and other relevant provisions of Directive 2014/53/EU.

## RETURN AND RECYCLING

The product must be recycled as electronic waste.

## DISCLAIMER

The device can withstand a load of max. 16A/3600W at 230VAC. We recommend a contactor for loads above 13A.

General info;
Worth noting regarding correct installation of thermostats.
When two or more thermostats are mounted too close to each other, the heat they emit, can interfere with the temperature sensors and the temperature in the junction box becomes too high. This can cause inaccurate temperature readings, especially under high load, leading to incorrect heating control. To avoid such issues, thermostats should be installed as far apart as possible and always in separate junction boxes. This ensures more accurate temperature readings.

In multi-frames with multiple units, the thermostat should always be mounted at the bottom, and no more than one thermostat should ever be installed in a multi-frame.

We develop and design our products according in accordance with our strict quality requirements (ISO 9001) and environmental requirements (ISO 14001).
All electrical installations must be carried out by an authorized electrical installer. The product must be installed in accordance with our installers manual and national building codes. Any wrongful installation, misuse, damage of the product, is not covered under warranty.

Updated documentation is available at www.heatit.com or documents.heatit.com
Heatit Controls AS can not be held liable for any type of errors or omittances in our product information.
Product specifications may change without further notice.

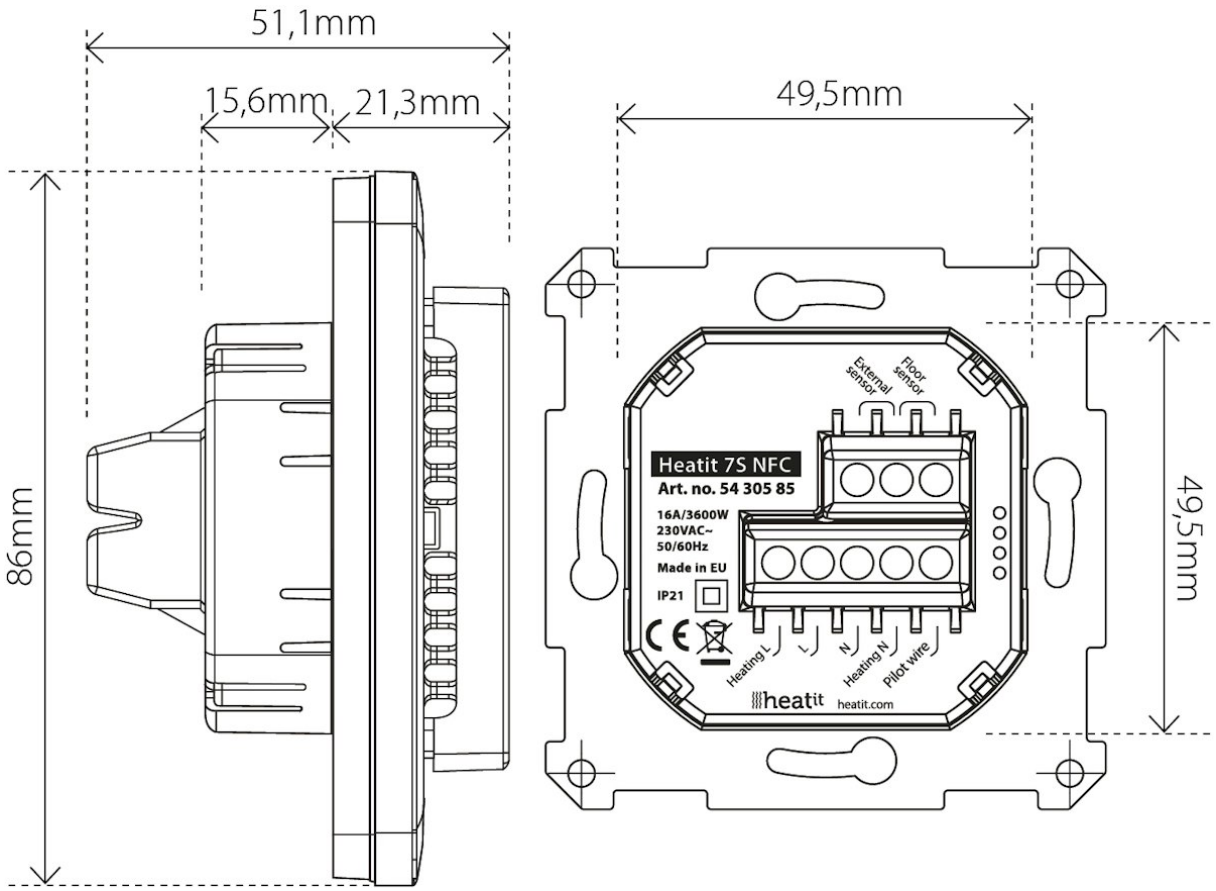
51,1mm
15,6mm
21,3mm
86mm
49,5mm
49,5mm
External sensor
Floor sensor
Heatit 7S NFC
Art. no. 54 305 85
16A/3600W
230VAC~
50/60Hz
Made in EU
IP21
Heating L
L
N
Heating N
Pilot wire
heatit
heatit.com