

HEATIT Z-HAN2

Z-Wave sensor for power metering

Art.no	4512599
GTIN	7071236018230

Smart HAN-sensor.
Heatit Z-HAN2 is a Z-Wave HAN sensor for AMS meters (Smart meters). Heatit Z-HAN2 works with HAN ports.

The Heatit Z-HAN 2is equipped with an RJ45 port for connecting the AMS meter. The Heatit Z-HAN2 can be powered through the RJ45 port by most AMS meters, but also has a 5V micro USB input for external power supply.

PRODUCT FEATURES

- Z-Wave HAN sensor
- RJ45 and Micro-USB
- Active power metering
- SmartStart
- Supports encryption mode S0, S2 Authenticated Class,
- Firmware Update (OTA)
- Temperature sensor
- S2 Unauthenticated Class

PRODUCT DATA

Ambient temperature range in use	5 to 40°C
Min. and max ambient humidity (RH%)	10 to 85%
Colour	Black Olive RAL 6015

ADDITIONAL INFO

IP Code	IP20
Certification	Reach, RoHS
EN Standards	CE, Z-Wave Plus
Warranty international	2 years
Customs number	85176900
Country of origin	CN

IOT / SMART HOME SPECIFIC DATA

Working frequency	Z-Wave - 868.4 MHz (EU)
Z-Wave Chip	Z-Wave 800 chip
Z-Wave encryption mode	AES-128 encryption S0 S2 Authenticated Class S2 Unauthenticated Class
Min radio frequency range	40m
Over The Air update (OTA)	Yes

ELECTRO TECHNICAL DATA

Voltage	5V DC (Micro-USB)

PRODUCT DIMENSIONS

Product length	80mm	Product width	31mm
Product height-/depth	22mm	Product net weight	36g

MAINTENANCE

The device is maintenance-free. Indoor use only.

ADDITIONAL INFORMATION

The product must be used with a security-enabled Z-Wave Controller in order to fully utilize security/encryption.

RETURN AND RECYCLING

The product must be recycled as electronic waste.

DISCLAIMER

We develop and design our products according in accordance with our strict quality requirements (ISO 9001) and environmental requirements (ISO 14001).
All electrical installations must be carried out by an authorized electrical installer. The product must be installed in accordance with our installers manual and national building codes. Any wrongful installation, misuse, damage of the product, is not covered under warranty.

Updated documentation is available at www.heatit.com or documents.heatit.com
Heatit Controls AS can not be held liable for any type of errors or omittances in our product information.
Product specifications may change without further notice.

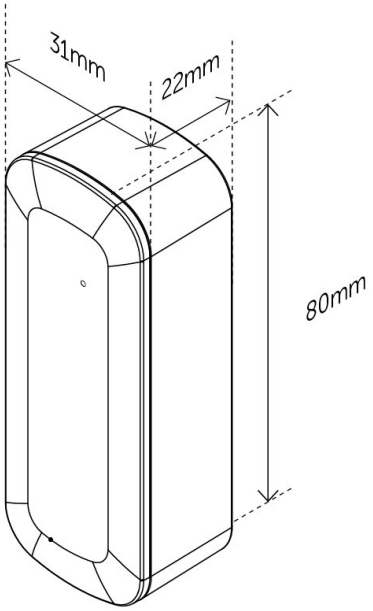
31mm
22mm
80mm