

HEATIT ZIG DIM 250W WHITE RAL 9003

Zigbee rotary dimmer

Art.no	1444420
GTIN	7071236016915

Heatit Zig Dim is a ZigBee rotary dimmer for many different types of light fixtures. The dimmer works on most low loads without causing flickering. Heatit Zig Dim is very well suited for LED.

The dimmer is equipped with an external momentary switch option. This allows you to dim and turn on/off the light.

The dimmer fits in European wall boxes and can be used with most frames that are adapted to System 55.

PRODUCT FEATURES

- ZigBee rotary dimmer
- 2-wire
- 5W - 250W LED
- Rotary and push dimming
- Nemko certified
- Trailing edge
- Overload protection
- Short circuit protection
- Surge protection
- Overheat protection
- External momentary switch
- Min. dim level adjustable
- Max dim level auto-calibration

IOT / SMART HOME SPECIFIC DATA

Alternate IoT-communication protocols	ZigBee 3.0
Min radio frequency range	40m
Over The Air update (OTA)	Yes

PRODUCT DATA

Ambient temperature range in use	5 to 40°C
Ambient temperature range in storage	-30 to 70°C
Min. and max ambient humidity (RH%)	10 to 85%
Colour	White RAL 9003

ELECTRO TECHNICAL DATA

Voltage	230VAC 50Hz
Voltage Output	230VAC 50Hz
Power	5 to 250W
Connection terminals diameter	0.2 to 2.5mm^2
Max tightening torque connections	2N·m
Connection type	Screw clamps
Method of control	Push and Rotary Dimming

ADDITIONAL INFO

IP Code	IP21
Certification	Reach, RoHS
EN Standards	CE, Nemko
Warranty international	2 years
Customs number	85437000

PRODUCT DIMENSIONS

Product length	94mm	Product width	90mm
Product height-/depth	70mm	Product net weight	139g

MAINTENANCE

The device is maintenance-free. Indoor use only

ADDITIONAL INFORMATION

Dimming may be challenging, and we recommend checking the compatibility of different light sources before installation.

When connecting low loads it is recommended to use a bypass.

Working frequency 2.4GHz. Max output power 12,49dBm.
The distance between user and products should be no less than 20 cm.

RETURN AND RECYCLING

The product must be recycled as electronic waste.

DISCLAIMER

We develop and design our products according in accordance with our strict quality requirements (ISO 9001) and environmental requirements (ISO 14001).
All electrical installations must be carried out by an authorized electrical installer. The product must be installed in accordance with our installers manual and national building codes. Any wrongful installation, misuse, damage of the product, is not covered under warranty.

Updated documentation is available at www.heatit.com or documents.heatit.com
Heatit Controls AS can not be held liable for any type of errors or omittances in our product information.
Product specifications may change without further notice.

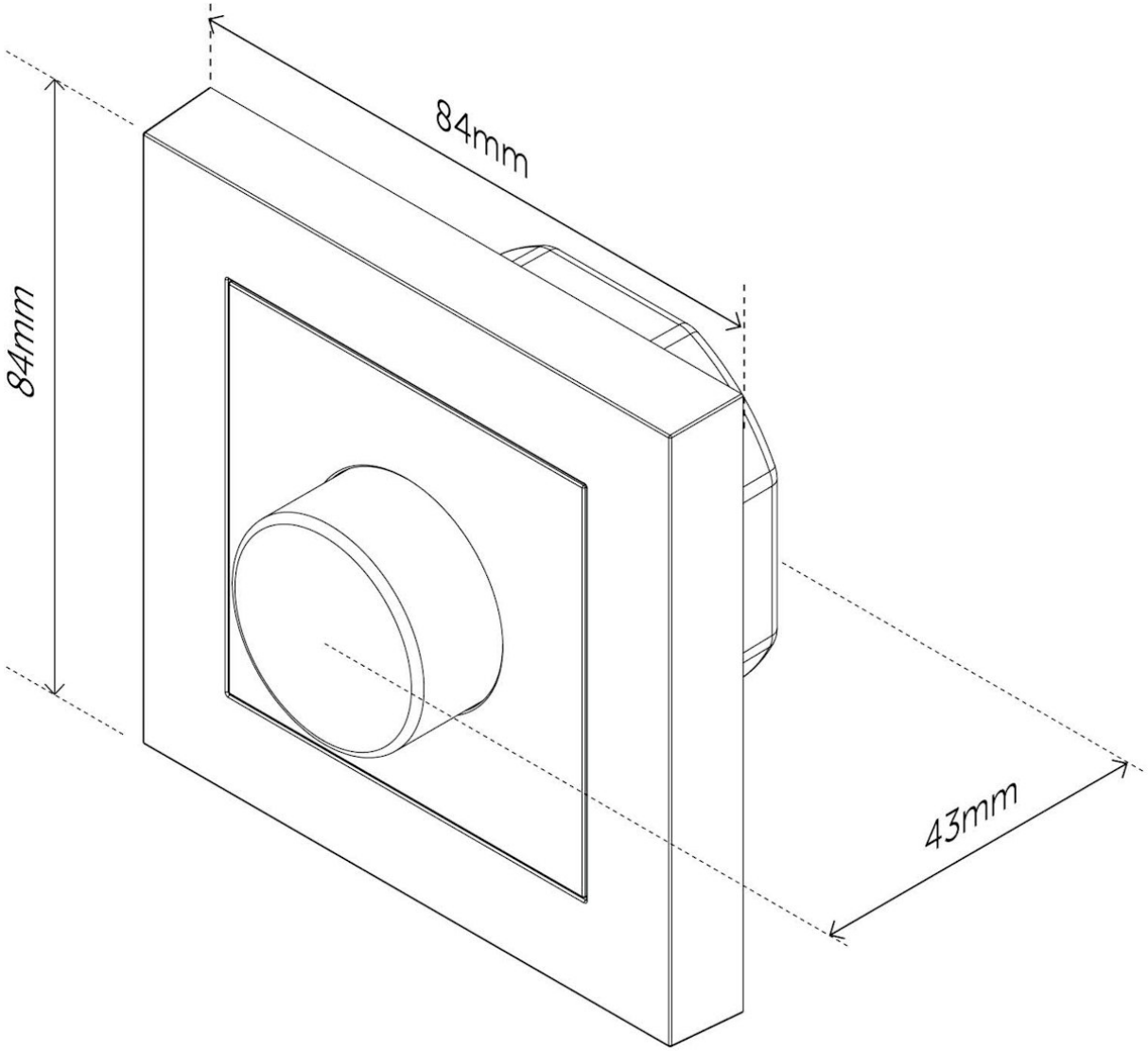
84mm
84mm
43mm