

HEATIT HC2 DOUBLE FRAME BLACK MATT

Frame for Heatit Dimmers and Thermostats

Art.no	1444492
GTIN	7071236018445

Heatit HC frames are a frame system with space for one, two or three products. Frames for use with Heatit and Multireg products such as thermostats, dimmers and external sensors. Fits System 55 products.

PRODUCT FEATURES

- Mounting of System 55 compatible products in one, two or three frame unit systems.

ADDITIONAL INFO

Customs number	39259009

PRODUCT DIMENSIONS

Product length	11mm	Product width	84mm
Product height-/depth	155mm		

MAINTENANCE

The product is maintenance-free.

RETURN AND RECYCLING

The product is recycled as hard plastic.

DISCLAIMER

We develop and design our products according in accordance with our strict quality requirements (ISO 9001) and environmental requirements (ISO 14001).
All electrical installations must be carried out by an authorized electrical installer. The product must be installed in accordance with our installers manual and national building codes. Any wrongful installation, misuse, damage of the product, is not covered under warranty.

Updated documentation is available at www.heatit.com or documents.heatit.com
Heatit Controls AS can not be held liable for any type of errors or omittances in our product information.
Product specifications may change without further notice.

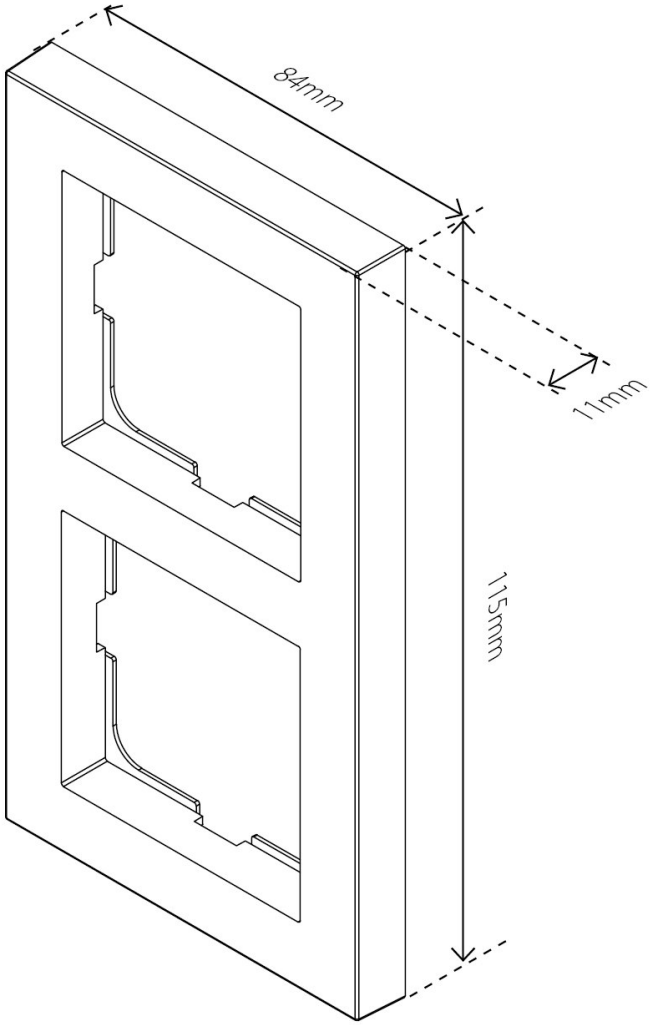
84mm
11mm
115mm